BERNSTEIN

1

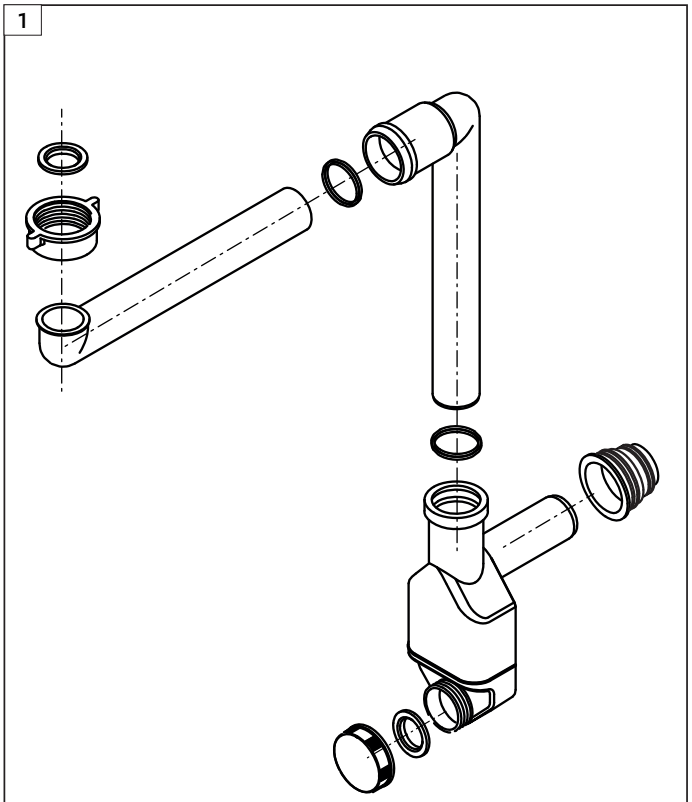

2

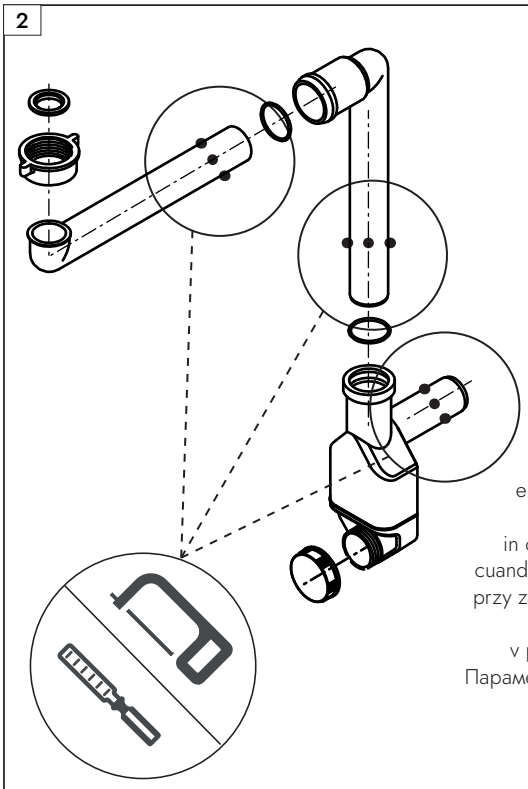

bei Bedarf
if necessary
en cas de besoin
indien nodig
in caso di bisogno
cuando sea necesario
przy zapotrzebowaniu
dle potreby
v prípade potreby
Параметры настройки
Vid behov
Ved behov
Igény szerint
设置选项

3

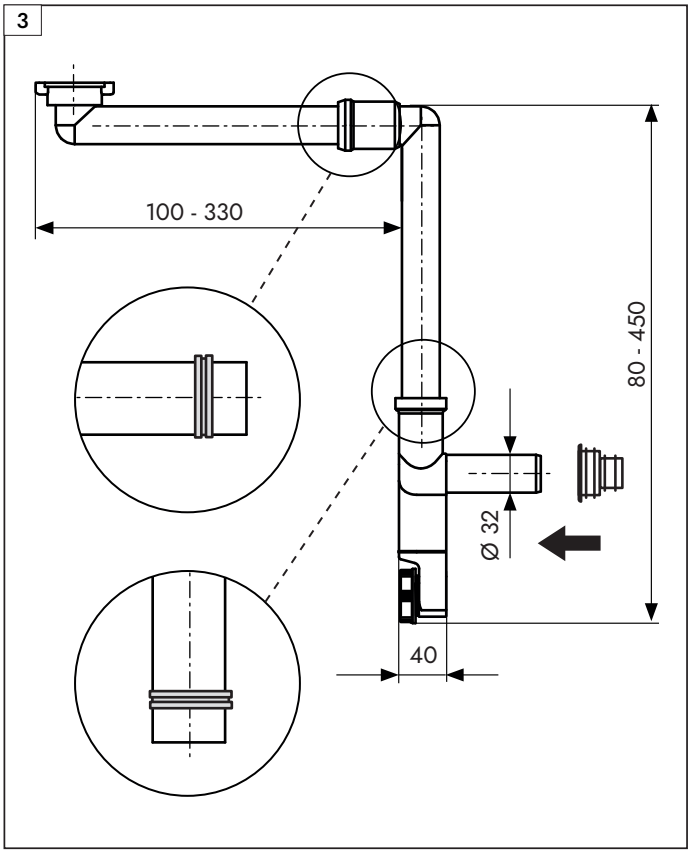

4

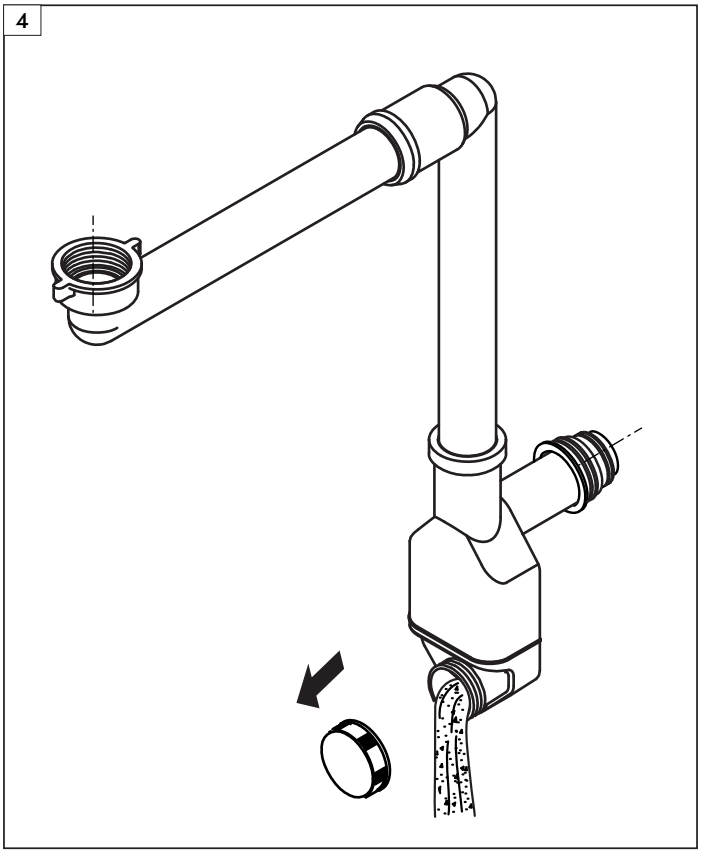

We reserve the right to make technical improvments and design modifications to the products illustrated. **MA-231126**

NEXTREND - GmbH | Weiherstraße 1, 65439 Flörsheim a. M., GERMANY
Fon: +49(0)6145–598830 | Fax: +49(0)6145–5988339
contact@nextrend.de | www.bernstein-badshop.de

FR 22 PAP