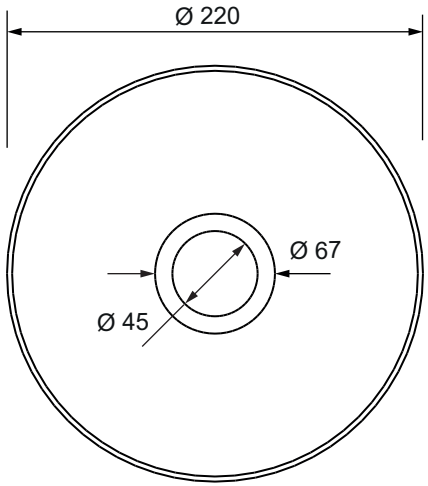
Ø 220
Ø 67
Ø 45

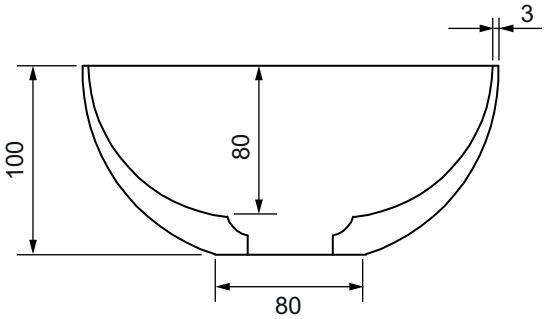
3
100
80
80

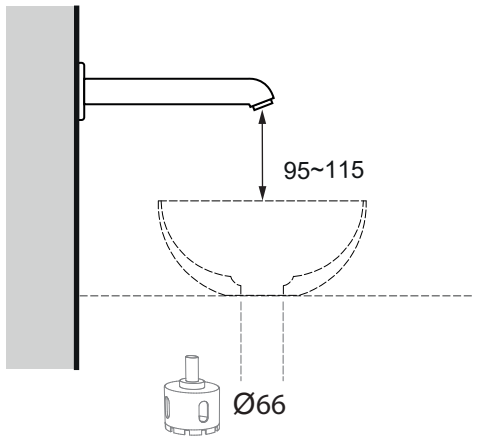
95~115
Ø66

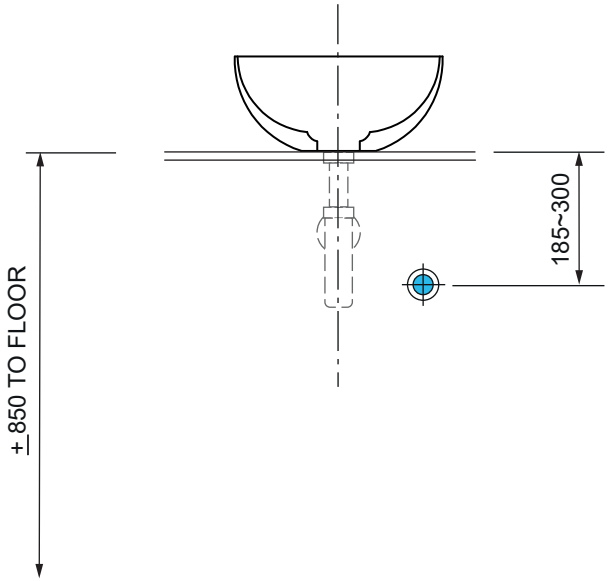
± 850 TO FLOOR
185~300