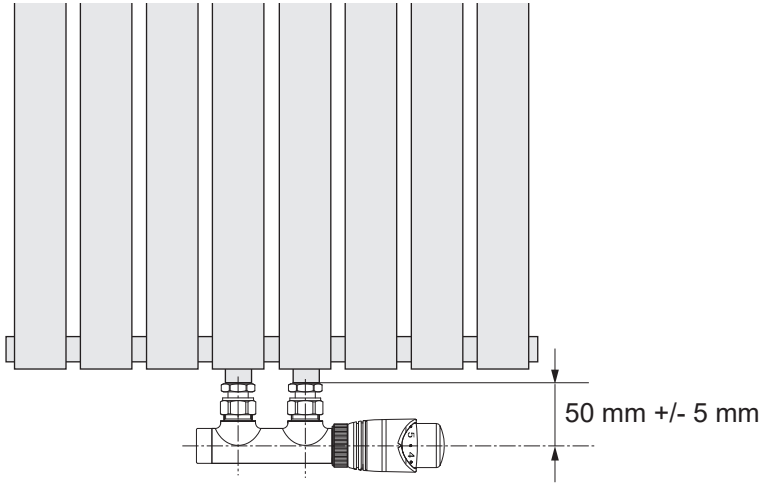
50 mm +/- 5 mm

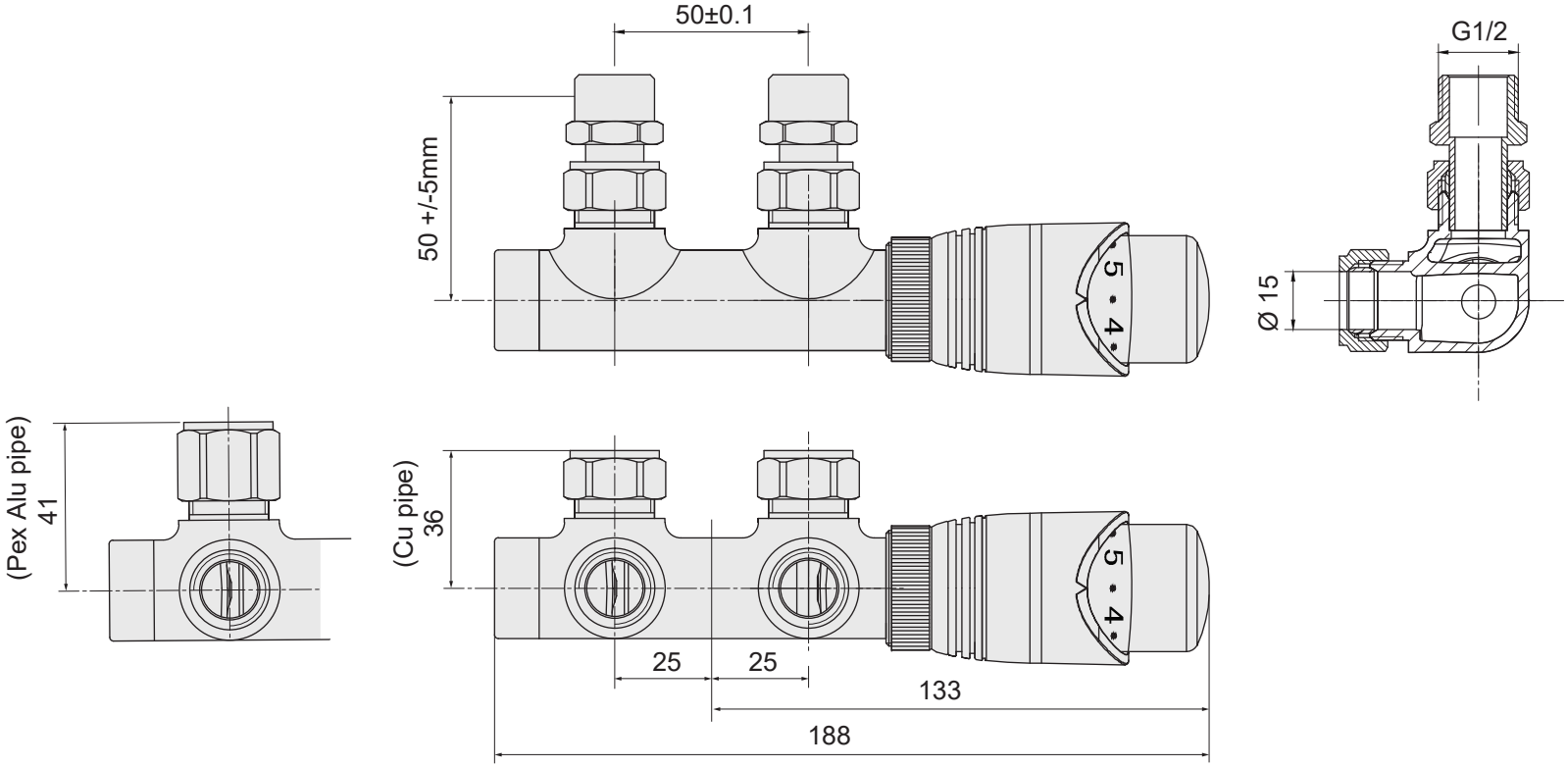
50±0.1
50 +/-5mm
G1/2
Ø 15
(Pex Alu pipe)
41
(Cu pipe)
36
25
25
133
188